# Coupe Regionale Seniors

Lievin 01/06/2014

*Cat. -73*

*Nb. Judokas : 27*

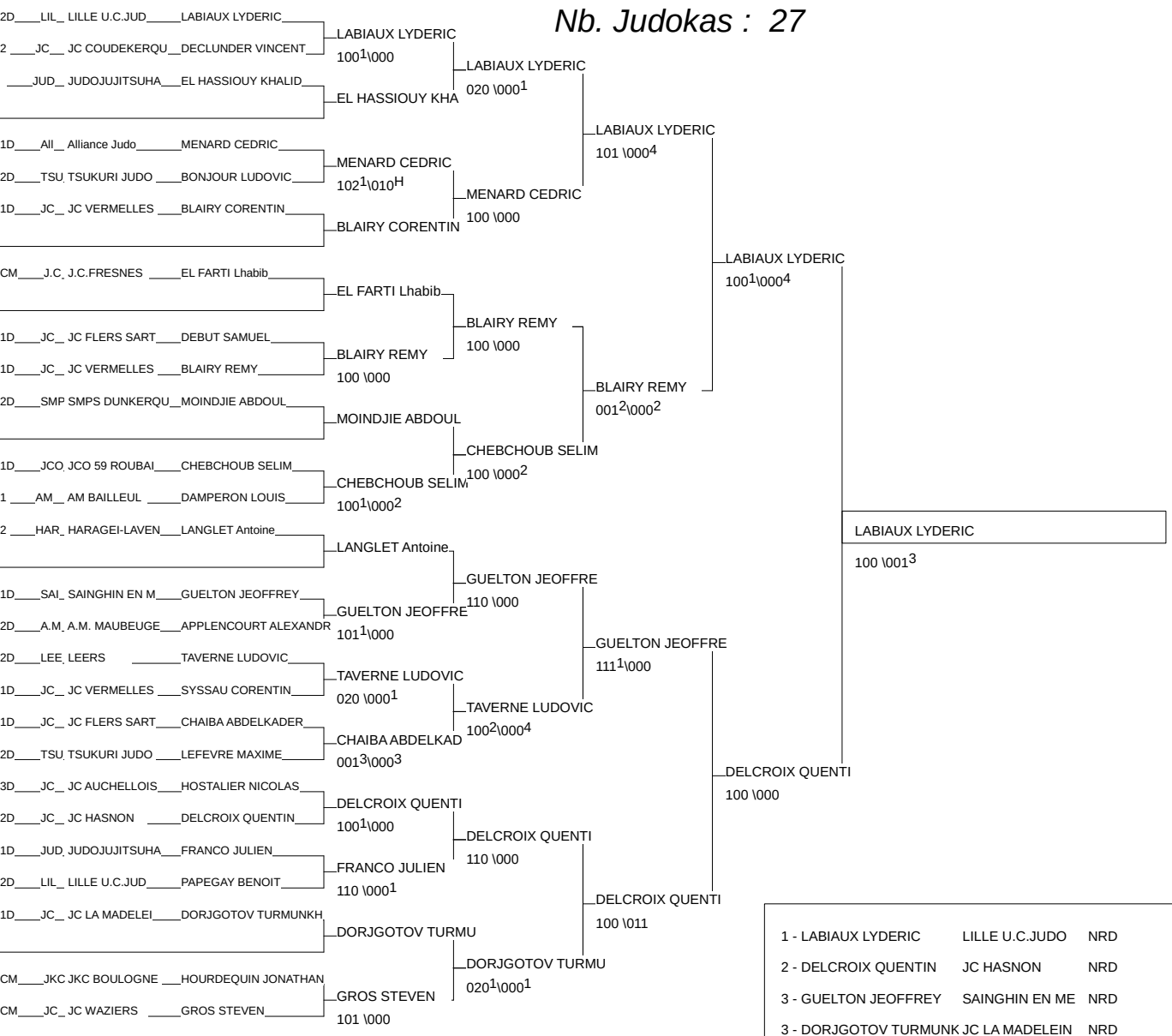

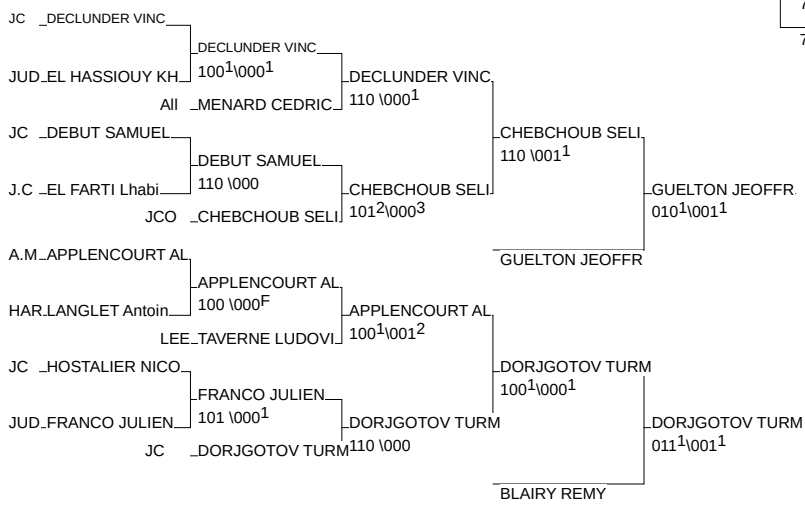
| | | | |
|---|---|---|---|
| 1 - LABIAUX LYDERIC | LILLE U.C.JUDO | NRD | LIL |
| 2 - DELCROIX QUENTIN | JC HASNON | NRD | JC |
| 3 - GUELTON JEOFFREY | SAINGHIN EN ME | NRD | SAI |
| 3 - DORJGOTOV TURMUNK | JC LA MADELEIN | NRD | JC |
| 5 - CHEBCHOUB SELIM | JCO 59 ROUBAIX | NRD | JCO |
| 5 - BLAIRY REMY | JC VERMELLES | NRD | JC |
| 7 - DECLUNDER VINCENT | JC COUDEKERQUC | NRD | JC |
| 7 - APPLENCOURT ALEXAN | A.M. MAUBEUGE | NRD | A.M |